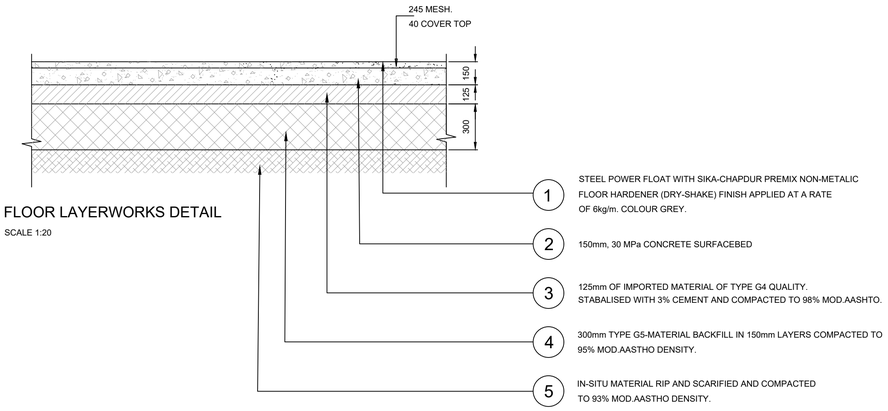

FLOOR LAYERWORKS DETAIL

SCALE 1:20

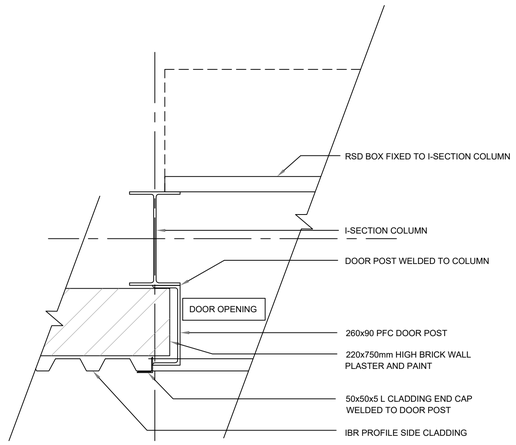

DETAIL 1 - PLAN VIEW

SCALE 1:10

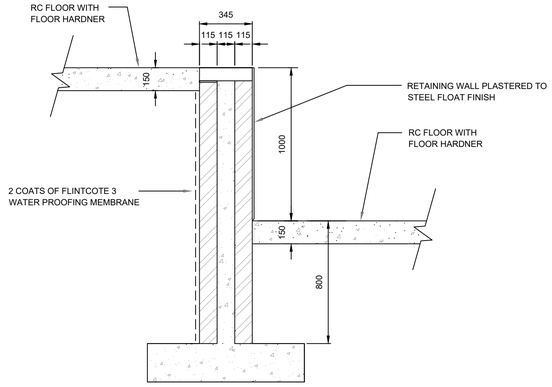

SECTION A

SCALE 1:20

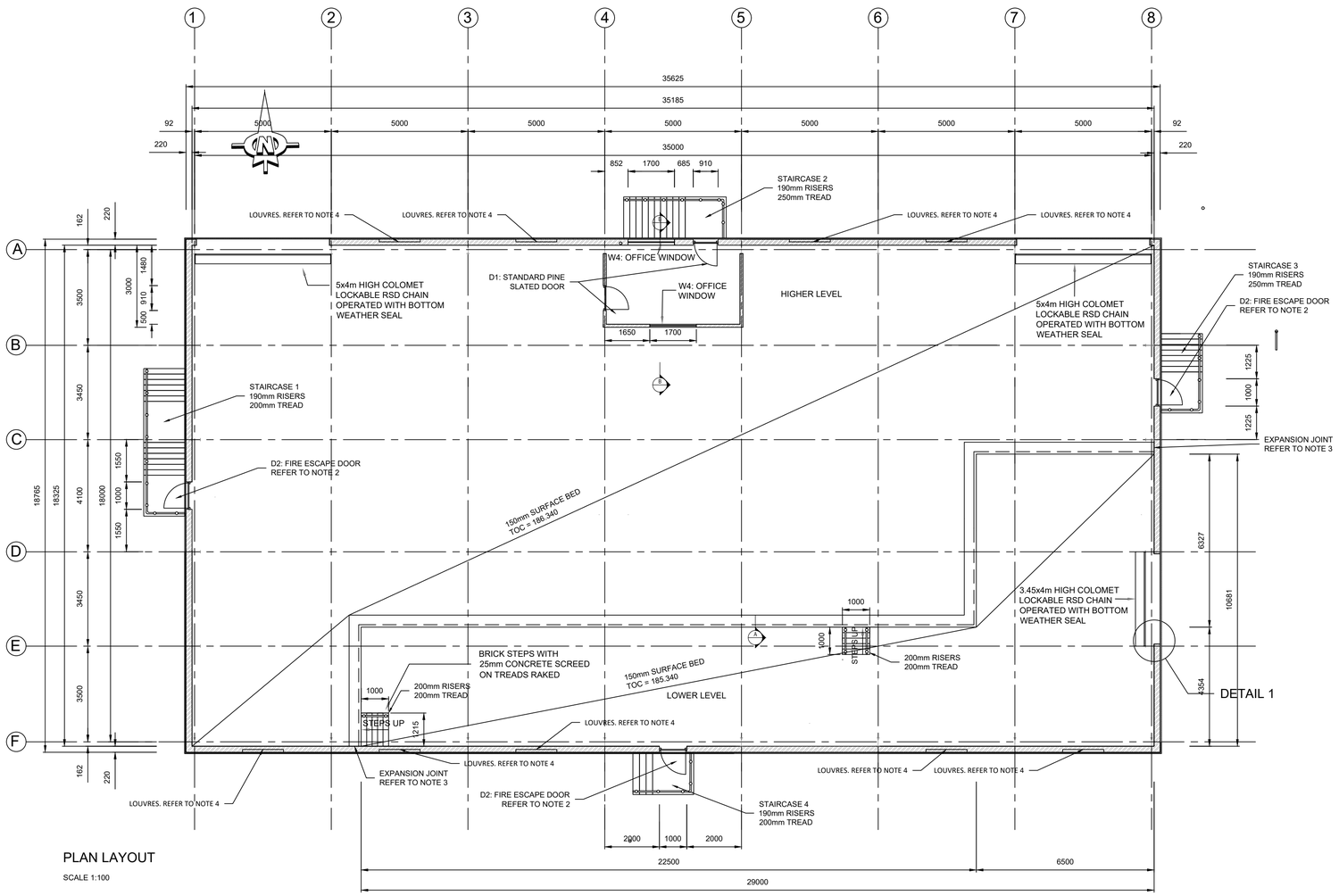

PLAN LAYOUT

SCALE 1:100

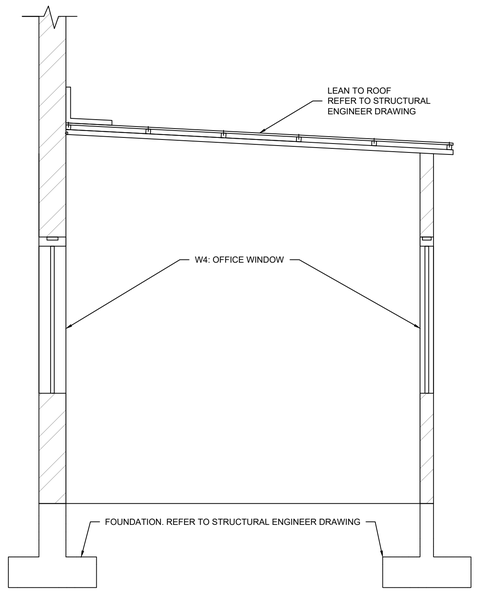

SECTION B

SCALE 1:25

NOTES:

1. 150mm RC FLOOR. POWER FLOAT FINISH WITH FLOOR HARDENER, ON APPROVED COMPACTED MATERIAL TO SPECIFICATION.
2. FIRE ESCAPE DOOR: FOR FURTHER SPECIFICATION REFER TO MECHANICAL ENGINEER'S DRAWINGS.
3. EXPANSION JOINT: FOR FURTHER DETAIL REFER TO STRUCTURAL ENGINEER'S DRAWINGS.
4. ALUMINIUM ZINC COATED STEEL SFL4 FIXED LOUVRES IN AZ 150/200 SQUARE LOUVRES [HEIGHT (1500x1500mm) WIDTH], IN ZINCAL/COLORPLUS, MOUNTED IN A METAL SURROUND FRAME INTO CLADDING, FLASHED ACCORDING TO MANUFACTURERS RECOMMENDATIONS.

DRAWING ORIGINALLY DONE BY:

OFFICE: ☎ ☎ FAX:
STELLENBOSCH 3011 8871026 8838514
GRAHAMSTOWN 509 6227223 6227671
NELSPRUIT 498 7528213 7532115
ACER AFRICA 503 3402715 3402232
PIETERMARITZBURG 2821 3453530 3427728
REG. NO. 77/04283/21
CONSULTING SERVICES (SOUTH) (PTY) LTD

Scale: AS SHOWN

0 5 10 15 20 30 50mm

ORIGINAL SIZE A1

Rev.	Date	Description	Rev. by
A	25/04/2022	PRELIMINARY DESIGN	REL

Client/Employer

LANGEBERG MUNISIPALITEIT MUNICIPALITY MASIPALA

ELEMENT Consulting Engineers
A FIFTH DIMENSION TO ENGINEERING
Block C, Oxford Gate, 54 Oxford Street, Durbanville, 7550
P O Box 1142, Durbanville, 7551
Tel: +27 21 975 1718 Fax: +27 21 976 8495
E-Mail: info@eceng.co.za

Project

ASHTON MATERIAL RECOVERY FACILITY

Plan Description

MATERIALS SORTING BUILDING PLAN LAYOUT DETAIL

	Name	Signature
Designed	REL	
Drawn	REL	
Checked	JS	
Approved	BV	
Pr. No.		

Contract No. 2104161

Drawing No. 2104161/A/001

Revision A

COPYRIGHT IS VESTED IN ELEMENT CONSULTING ENGINEERS (PTY) LTD IN TERMS OF THE COPYRIGHT ACT (ACT 98 OF 1978).

P:\Durbanville\2021\2104161 - Ashton Material Recovery Facility\D - Drawings\D8 - Working Drawings\01_CIVIL\2104161 - ASHTON MRF MATERIAL SORTING BUILDING - 25APRIL2022.dwg